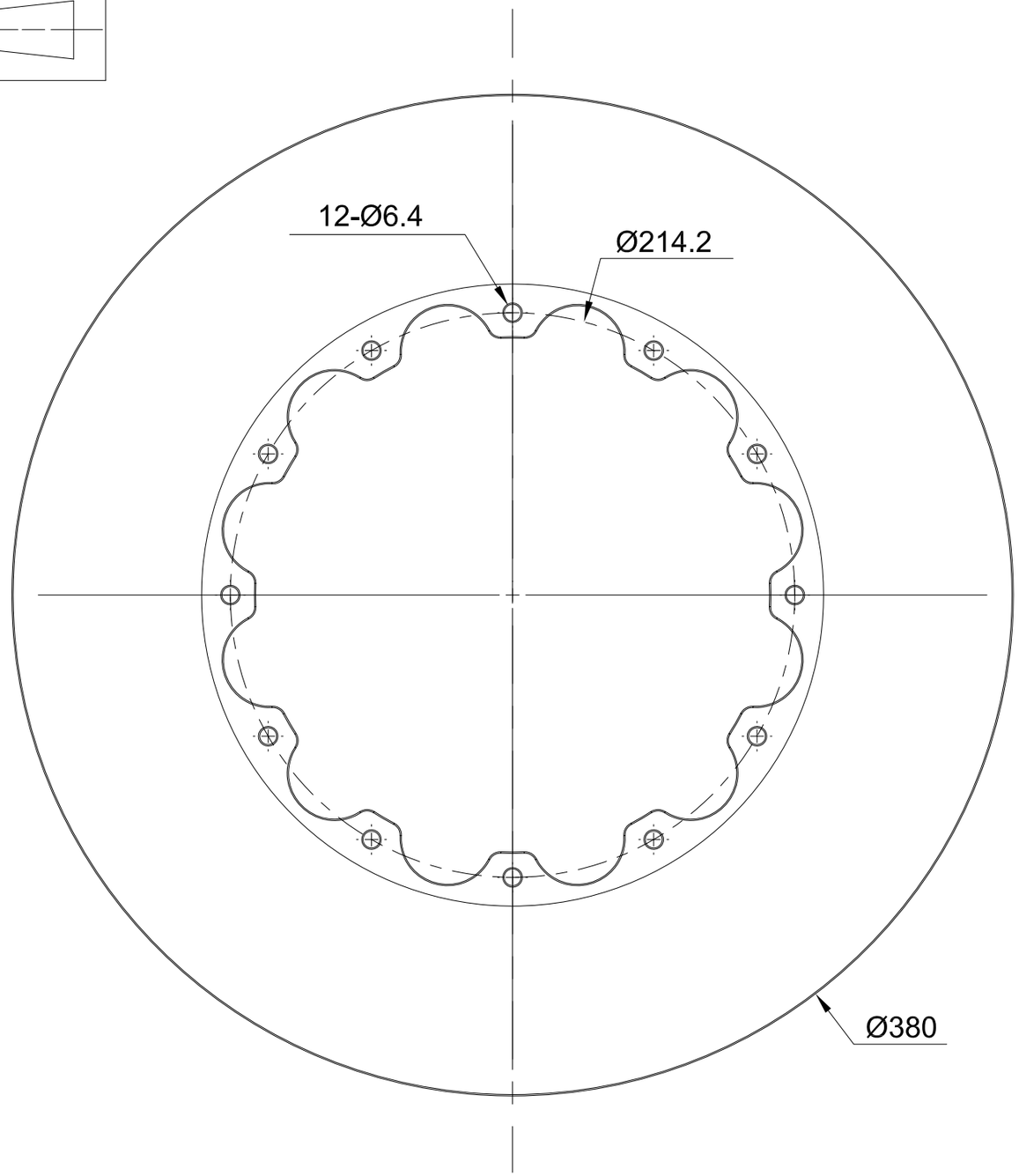

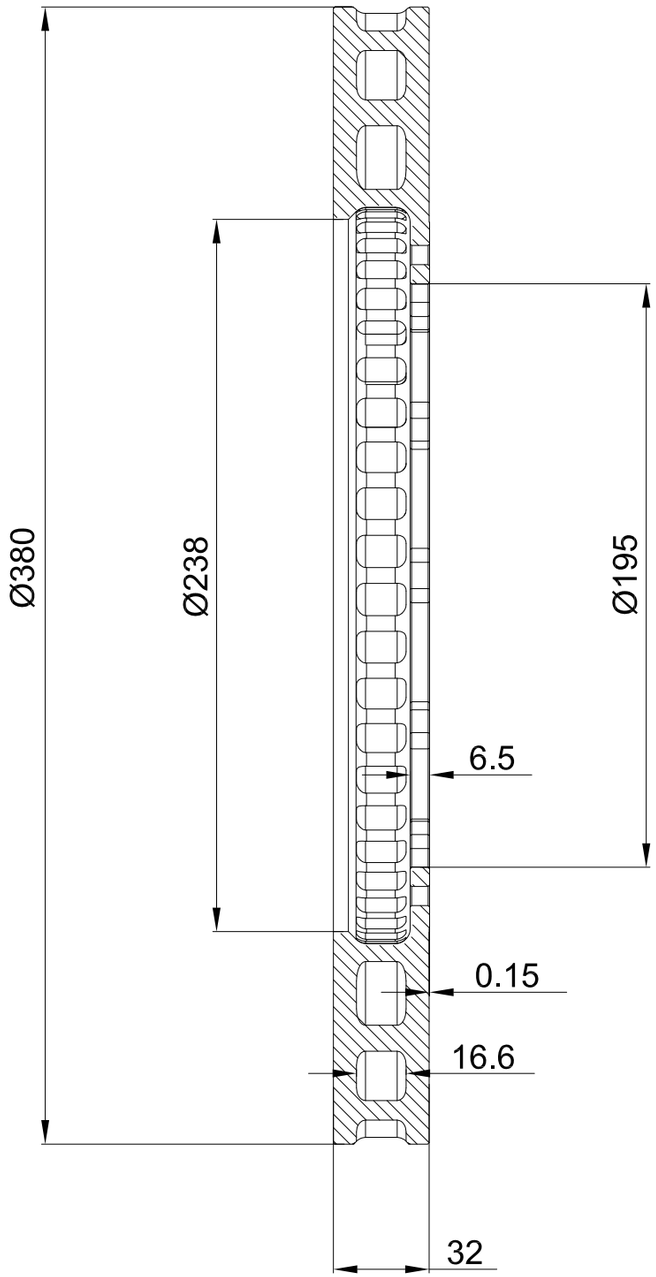

PROPRIETARY AND CONFIDENTIAL

THE INFORMATION CONTAINED IN THIS DRAWING IS THE SOLE PROPERTY OF PARAGON PERFORMANCE PRODUCTS INC. ANY REPRODUCTION IN PART OR AS A WHOLE WITHOUT THE WRITTEN PERMISSION OF PARAGON PERFORMANCE PRODUCTS INC. IS PROHIBITED.

NEXT ASSY	USED ON
APPLICATION	

UNLESS OTHERWISE SPECIFIED:

DIMENSIONS ARE IN MM
TOLERANCES:
FRACTIONAL ±
ANGULAR: MACH ± BEND ±
TWO PLACE DECIMAL ±
THREE PLACE DECIMAL ±

INTERPRET GEOMETRIC TOLERANCING PER:

MATERIAL
CM-250 Alloy Cast Iron

FINISH
Natural

DO NOT SCALE DRAWING

	NAME	DATE
DRAWN	John T.	08-15-2018
CHECKED		
ENG APPR.		
MFG APPR.		
Q.A.		

COMMENTS:

Paragon

TITLE:
380x238x32 12x6.4 PCD214.2 D70

SIZE	DWG. NO.	REV
A		1

SCALE: 1:1 | WEIGHT: | SHEET 1 OF 1